FILE: VI 52-4

PIN AND CLEVIS
ANSI CLASS 52-4
CAT NO: VI 52-4

1 ENG. MGR
2 ENG
PURCH.
1 MKTG.
PLT.MGR.
COST
PROD.
INSP
GLAZE
BUSHING
MAKING
SHIP
ASSEM
MODEL
MACH.
45
TOOLING
CER LAB
1 EL LAB
1 E. MEDIA

DIMENSIONS

LEAKAGE DISTANCE	IN	11.5	mm	292

MECANICAL VALUES

M & E STRENGTH	LB	15,000	kN	67
IMPACT STRENGTH	IN-LB	55	N-m	6.0
TENSION PROOF	LB	7,500	kN	33.5

ELECTRICAL VALUES

LOW FREQUENCY FLASHOVER VOLTAGE DRY	kV	80
LOW FREQUENCY FLASHOVER VOLTAGE WET	kV	50
CRITICAL IMPULSE FLASHOVER VOLTAGE POSITIVE	kV	125
CRITICAL IMPULSE FLASHOVER VOLTAGE NEG.	kV	130
LOW FREQUENCY PUNCTURE VOLTAGE	kV	110

RADIO INFLUENCE VOLTAGE DATA

LOW FREQUENCY TEST VOLTAGE	kV	10
MAXIMUM RIV @ 1000 kHz	µV	50

PACKING INFORMATION

NET WEIGHT PER 100	LB	1320
GROSS WEIGHT PER 100	LB	1583
STANDARD PACKAGE		6

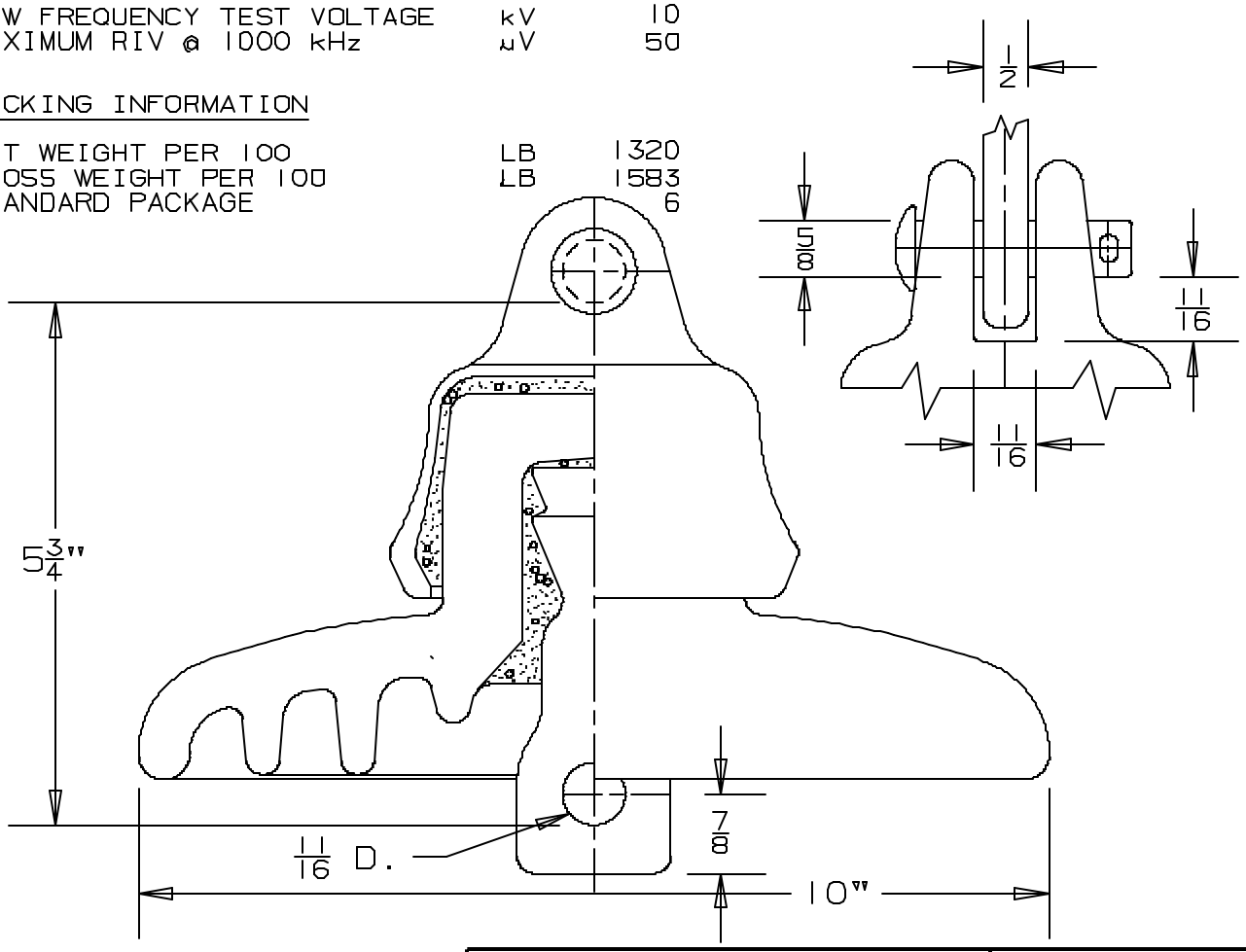

THIS DRAWING IS THE PROPERTY OF VICTOR INSULATORS, INC. AND CONTAINS PROPRIETARY AND CONFIDENTIAL INFORMATION WHICH MUST NOT BE DUPLICATED, USED, OR DISCLOSED OTHER THAN AS EXPRESSLY AUTHORIZED BY VICTOR INSULATORS, INC.

TITLE: VI 52-4

06-29-04	PP	TM	AS

INSULATORS
VICTOR INSULATORS, INC.
280 MAPLE AVENUE
VICTOR, NEW YORK 14564
TELEPHONE: (585)924-2127

VI 52-4