30

STATION POST
CAT. NO. 1740
7.5 kV 95 kV BIL

Eng. Mgr. 1
Eng. 2
Purch.
Mktg. 1
Supt.
Cost
Prod.
Insp.
Glazing
Bushing
Making
Ship
Assem.
Model
Mach.
45
Tooling
Cer. Lab.
El. Lab. 1
Q.A.

DIMENSIONS

LEAKAGE DISTANCE	IN	11

MECHANICAL VALUES

CANTILEVER STRENGTH, UPRIGHT	LB	2,000
CANTILEVER STRENGTH, UNDERHUNG	LB	2,000
TENSION STRENGTH	LB	15,000
TORSION STRENGTH	IN-LB	10,000
COMPRESSION STRENGTH	LB	50,000

ELECTRICAL VALUES

IMPULSE FLASHOVER - POS.	kV	105
60 HERTZ WITHSTAND- WET	kV	30
IMPULSE WITHSTAND	kV	95

RADIO INFLUENCE VOLTAGE DATA

60 HERTZ TEST VOLTAGE TO GRD.	kV	5
MAXIMUM RIV @ 1000 kHz	µV	50

PACKING INFORMATION

NET WEIGHT, EACH	LB	17
PACKED WEIGHT, EACH	LB	20
NO. IN STANDARD PACKAGE		3

4 HOLES EACH END
½-13 +.015" ON 3" BC

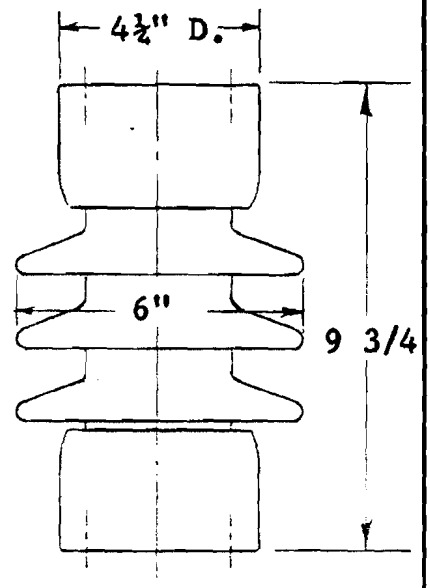

This drawing is the property of Victor Insulators, Inc. and contains proprietary and confidential information which must not be duplicated, used, or disclosed other than as expressly authorized by Victor Insulators, Inc.

DWN. G.J.R.	Victor Insulators, Inc. 280 Maple Avenue Mail: P.O. Box B, Victor, New York 14564 Telephone: (716) 924-2127	1740
8-29-84		
APP. ES		

SUPERSEDES DWG. 8538 DATED 2-26-71